ME by Starck One Piece Toilet # 218501..02 / 218501..82 / 218501..82 / 218501..02 / 218501..82

|< 15 1/2 " >|

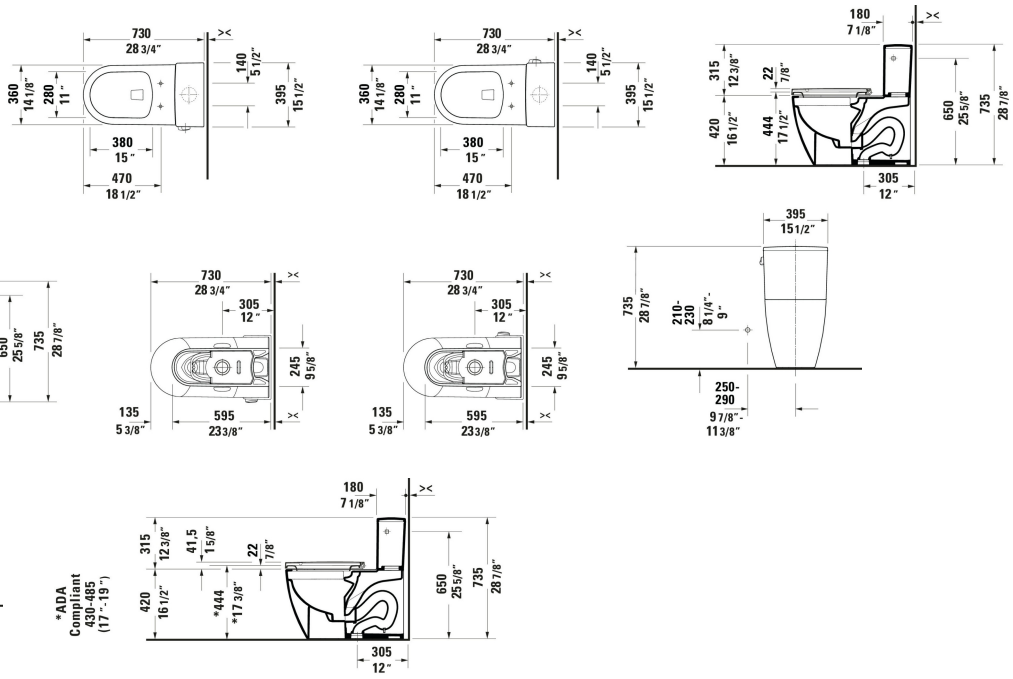

One Piece Toilet	Dimension	Weight	Order number
28 3/4 ", Elongated, Siphonic, Rimless, Outlet: vertical, Rough-in: 12 ", ADA: Yes, cUPC listed: Yes			
Colors			
00 White High Gloss 20 White High Gloss, HygieneGlaze AA White High Gloss, Coating			
Variant			
White High Gloss, Single Flush, Flush water quantity: 1.28/1.28 GPF, Trip lever placement: Left, WaterSense: Yes	15 1/2 "x28 3/4 "	147.710 lb	218501..02
White High Gloss, Single Flush, Flush water quantity: 1.28/1.28 GPF, Trip lever placement: Right, WaterSense: Yes	15 1/2 "x28 3/4 "	147.710 lb	218501..82
White High Gloss, HygieneGlaze, Single Flush, Flush water quantity: 1.28/1.28 GPF, Trip lever placement: Right, WaterSense: Yes	15 1/2 "x28 3/4 "	147.710 lb	218501..82
White High Gloss, DuraShield, Single Flush, Flush water quantity: 1.28/1.28 GPF, Trip lever placement: Left	15 1/2 "x28 3/4 "	147.710 lb	218501..02
White High Gloss, DuraShield, Flush water quantity: 1.28/1.28 GPF	15 1/2 "x28 3/4 "	147.710 lb	218501..82
Accessory			
Installation Set	2 3/8 x 5 1/8 "	1.874 lb	001417

ME by Starck One Piece Toilet # 218501..02 / 218501..82 / 218501..82 / 218501..02 / 218501..82

|< 15 1/2 " >|

Suitable products		
Toilet Seat Open front, Elongated, 14 3/8 x 19 1/8 "	14 3/8 x 19 1/8 "	006431
Toilet Seat Slow close, Open front, Elongated, 14 3/8 x 19 1/8 "	14 3/8 x 19 1/8 "	006439
Toilet Seat Slow close: No, Hinge material: Stainless Steel, Elongated, 14 3/4 x 19 1/4 "	14 3/4 x 19 1/4 "	002021
Toilet Seat Slow close: Yes, Removable Seat, Hinge material: Stainless Steel, Elongated, 14 3/4 x 19 1/4 "	14 3/4 x 19 1/4 "	002029
One Piece Toilet , 15 1/2 x 28 3/4 "	15 1/2 x 28 3/4 "	D42020
One Piece Toilet , 15 1/2 x 28 3/4 "	15 1/2 x 28 3/4 "	D42021

Text for invitation of tenders

Duravit ME by Starck One Piece Toilet 28 3/4 ", Designer: Philippe Starck, Flushing rim: rimless, Sanitary ware, Floorstanding, Outlet: vertical, Large flushing volume: 0 GPF, ADA height: 0 ", Concealed outflow, Dimensions (Width / Length x Depth/width x Height): 15 1/2 " x 28 3/4 " x 28 7/8 "

All drawings contain the necessary measurements which are subject to standard tolerances. They are stated in inch & mm and are non-binding. Exact measurements, in particular for customized installation scenarios, can only be taken from the finished ceramic piece.