JULIEN

# AV128270 | ARCOVA

**UNDERMOUNT SINGLE-BOWL STAINLESS STEEL KITCHEN SINK**

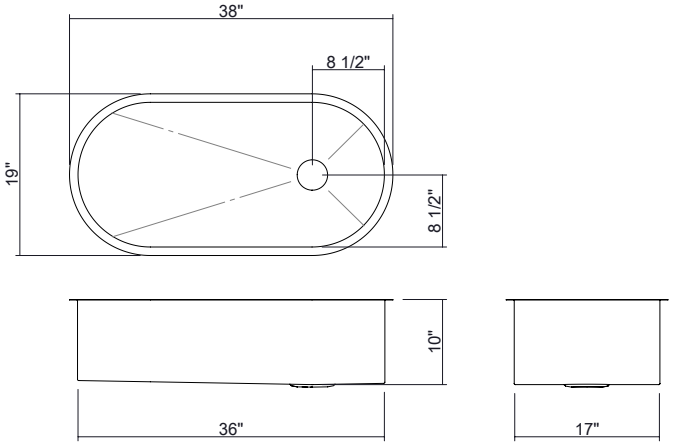


## Specifications

| | |
|---|---|
| **Model** | AV128270 |
| **Collection** | Arcova |
| **Bowl dimensions** | 36" × 17" × 10" |
| **Overall dimensions** | 38" × 19" × 10" |
| **Recommended cabinet** | 42" |
| **Countertop installation options** | Reveal 1/2"<br>Overhang 1/8" |

## Recommended accessories

| | |
|---|---|
| **Drain** | 100082 |
| **Grid** | AV131074 |

## Compatible accessories

| | Maple | Walnut | Black Composite |
|---|---|---|---|
| **12" Cutting board** | SM245102 | SM235102 | SM255102 |
| **6" Rectangular colander** | SM245206 | SM235206 | SM255206 |
| **6" Drying rack** | SM245200 | SM235200 | SM255200 |
| **12" Drying rack** | SM245203 | SM235203 | SM255203 |

## Features

- Proudly handcrafted in Canada.
- Commercial-grade 304 (18/10) stainless steel, 16-gauge thickness with a No. 4 brushed finish, providing strength, corrosion resistance, and seamless integration with appliances.
- Premium sustainable material, 100% recyclable.
- Two installation options optimized for any countertop thickness: overhang or reveal.
- Architectural form designed to complement modern kitchen islands.
- Accommodates select SmartStation 17-inch upper tier accessories.
- Smooth curved geometry for effortless cleaning and maintenance
- Enhanced noise reduction with our integrated sound-absorption technology, which reduces noise while helping maintain water temperature.
- Elegant grooves combined with a drainage slope to facilitate water drainage and minimize pooling water.
- Side 3-1/2-inch drain placement.
- Certifications: ASME A112.19.3, CSA B45.0, CSA B45.4.

## Warranty

JULIEN Inc. offers a LIMITED LIFETIME WARRANTY on the fixed components of its stainless steel sinks against defects of material and workmanship as well as a 1-YEAR LIMITED WARRANTY following the purchase date for all accessories against defects of material and workmanship. This warranty is limited to defects or damages resulting from a normal residential use. For further details on our product warranty, please refer to our catalog or web site.