PRO CHEF JULIEN

PROINOX H60

IHX60-US-17178-TBK-G

Undermount black PVD stainless steel kitchen sink
Handcrafted
Slightly rounded corners [0,60"]

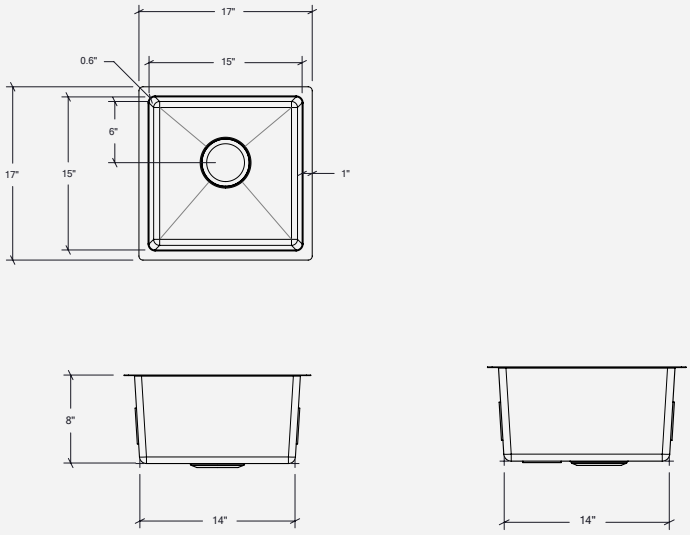

Installation
Undermount

Bowl
15″ × 15″ × 8″

Overall
17″ × 17″ × 8″

Recommended cabinet
21″

Drain
∅ 3½″

Features

- 304 brushed finish stainless steel (18/10) – 18 gauge
- NEW deeper black pvd coating
- Sound deadening pads for maximum noise reduction
- Drain located towards rear providing more space under the sink
- Undermount installation hardware included
- Product certified ASME A112.19.3, CSA B45.4-2022

Included

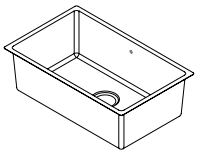
Sink

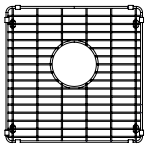
Grid

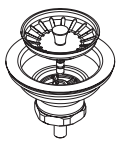
Drain with tailpiece

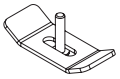
Installation hardware

Warranty

JULIEN offers a LIMITED LIFETIME WARRANTY on its stainless steel sinks against defects of material and workmanship. For further details on our product warranty, please refer to our catalog or web site.