TOTO®

CWT428CMFG

EP® Wall-Hung Toilet, 1.28 GPF & 0.9 GPF

FEATURES

EP Bowl

- DYNAMAX TORNADO FLUSH® system, high efficiency (1.28 GPF/0.9 GPF)
- CEFIONTECT® ceramic glaze - prevents debris, mold from sticking to ceramic surfaces
- Universal Height
- Elongated front bowl

DuoFit® In-Wall Tank

- Dual flushing system, high-efficiency (1.28 GPF/4.8 LPF & 0.9 GPF/3.4 LPF) Avg. flush 1.03 GPF
- Adjustable 15"-19" mounting height
- Saves up to 9" of floor space compared to standard floor-mounted toilet
- Supports up to 880lbs
- Commercial 2" x 6" or optional residential installation with 2" x 4" wall studs with waste outlet kit
- Copper supply line

Push Plate

- YT930
  Basic Round Push Plate
  #WH White Matte or #MS Matte Silver

KIT COMPONENTS

- CT428CFG#01
  EP Wall-Hung Toilet
- WT172M
  In-Wall Tank System (Copper Pipe)
- YT930
  Basic Round Push Plate
  #WH White Matte or #MS Matte Silver

Available Options

- YT920#WH - White Matte Basic Square Push Plate
- YT920#MS - Matte Silver Basic Square Push Plate
- YT970#SS - Stainless Steel Wall Round Push Plate
- YT970#B - Black Wall Round Push Plate
- YT970#W - White Wall Round Push Plate
- YT970#N - Nickel Wall Round Push Plate
- YT980#SS - Stainless Steel Wall Square Push Plate
- SS114 - SoftClose Seat

COLORS/FINISHES

- #01 Cotton

(Seat not included)

D+ DYNAMAX TORNADO FLUSH

SD Skirted Design

CEFIONTECT

CODES/STANDARDS

- Meets or exceeds:
  -Bowl: ASME A112.19.2/CSA B45.1, ASME A112.19.14
  -Carrier System: ASME A112.6.2
  -Tank Trim: IAPMO PS50, CSA B125.3, ASSE1002
- Certifications: IAPMO (cUPC), EPA WaterSense State of Massachusetts, City of Los Angeles and others
- Legislative compliance: California AB715, California Green Building Code, City of Los Angeles Water Efficiency Ordinance
- Code Compliance: UPC, IPC, NSPC, NPC Canada, and others
- Complies with CA Prop 65 warning requirements

CWT428CMFG

EP® Wall-Hung Toilet, 1.28 GPF & 0.9 GPF

PRODUCT SPECIFICATIONS

	CT428CFG	WT172M
Water Use	1.28 GPF & 0.9 GPF (4.8 LPF & 3.4 LPF)	1.28 GPF & 0.9 GPF (4.8 LPF & 3.4 LPF)
Flush System	DYNAMAX TORNADO FLUSH®	Dual flushing
Min. Water Pressure	8 psi (static)	8 psi (static)
Max. Water Pressure	108.75 psi (static)	108.75 psi (static)
Water Surface	5-1/2" X 4-1/8"	
Trap Diameter	2-1/8"	
Installation Height	15" to 19"	15" to 19"
Trap Seal	2-1/8"	
Warranty	One Year Limited Warranty	One Year Limited Warranty
Material	Vitreous China	Various
Shipping Weight	68 lbs	38 lbs
Shipping Dimensions	22" L x 14.6" W x 16.5 H	48" L x 26-1/2" W x 6" H

CT428CFG

This universal height, high efficiency DYNAMAX TORNADO flushing system toilet shall be 1.28 GPF & 0.9 GPF. Toilet shall have CEFIONTECT ceramic glaze. Toilet shall be mounted to in-wall tank system, elongated front bowl and wall-mounted push-button type trip lever. Toilet shall be TOTO Model CT428CFG.

WT172M

This universal height, high-efficiency, dual flushing, in-wall tank system toilet shall be 1.28 GPF & 0.9 GPF. Requires TOTO toilet model CT428CFG. In-Wall tank system shall be TOTO Model WT172M.

PRODUCT DIMENSIONS

CT428CFG

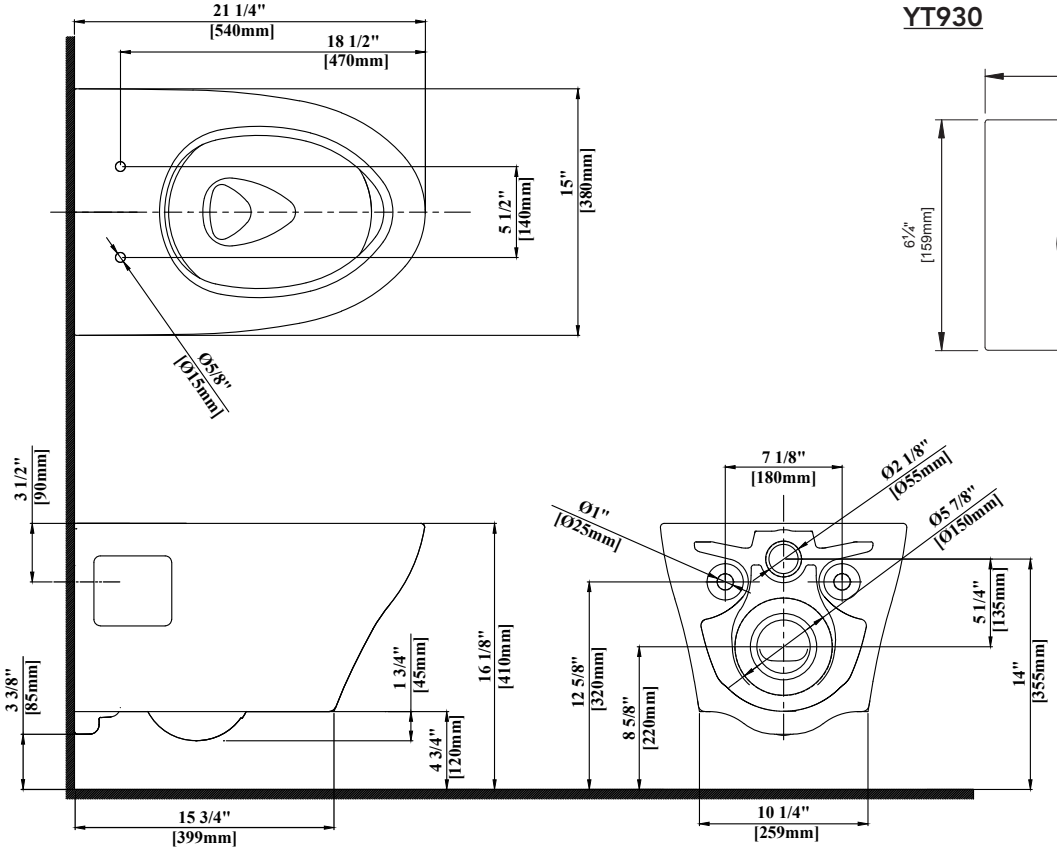

YT930

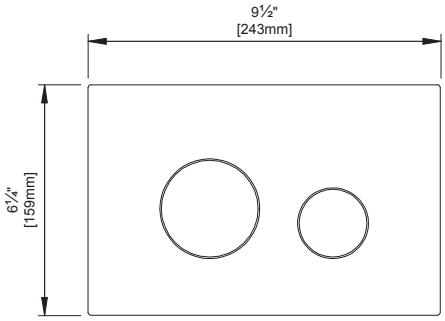

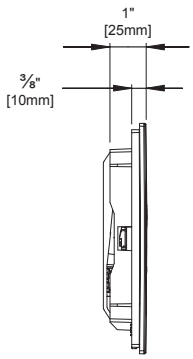

CWT428CMFG

EP® Wall-Hung Toilet, 1.28 GPF & 0.9 GPF

INSTALLATION NOTES

- Adequate structural bracing is required
- Framing support should be capable of supporting 880 lbs load without damage to the wall. See installation manual for more details.

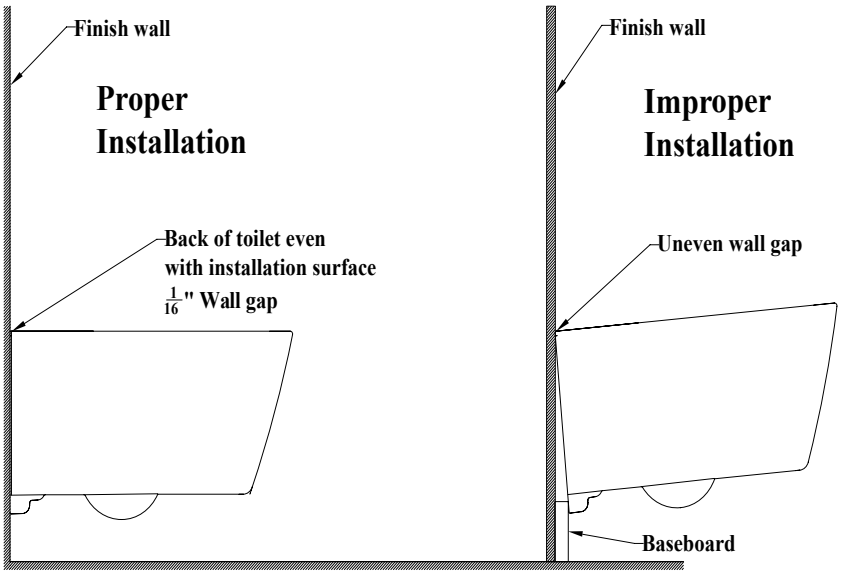

DIMENSIONS
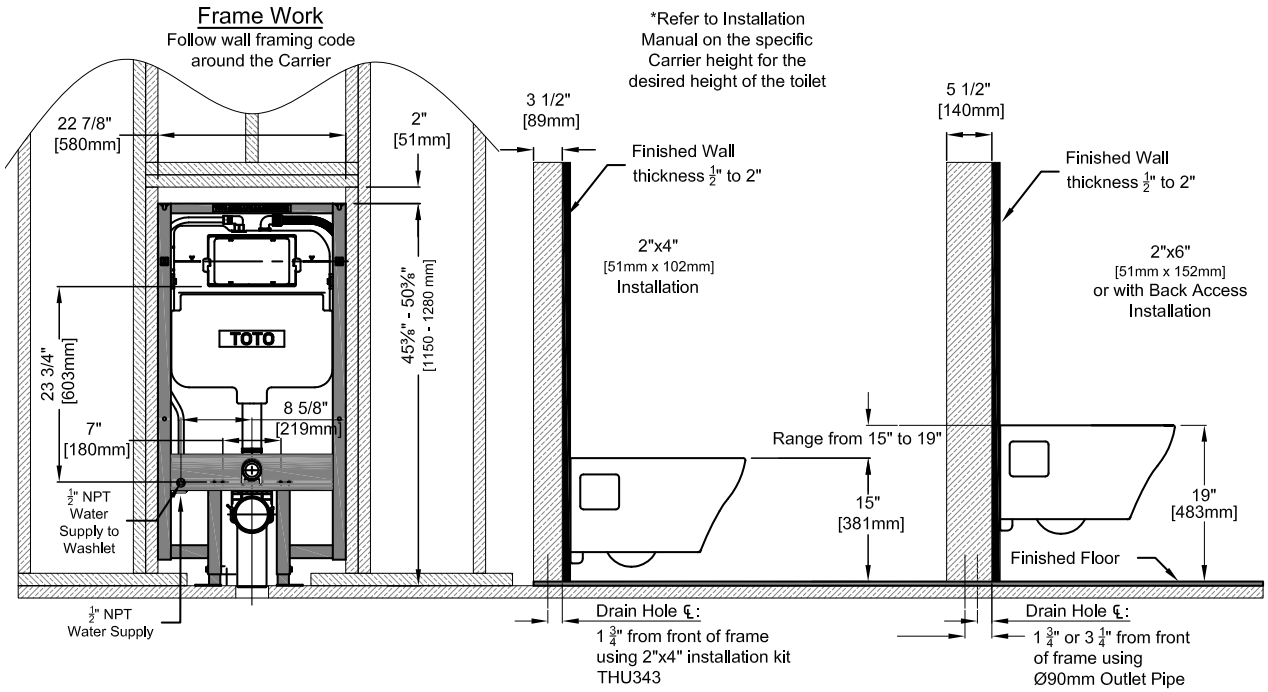
WT172M